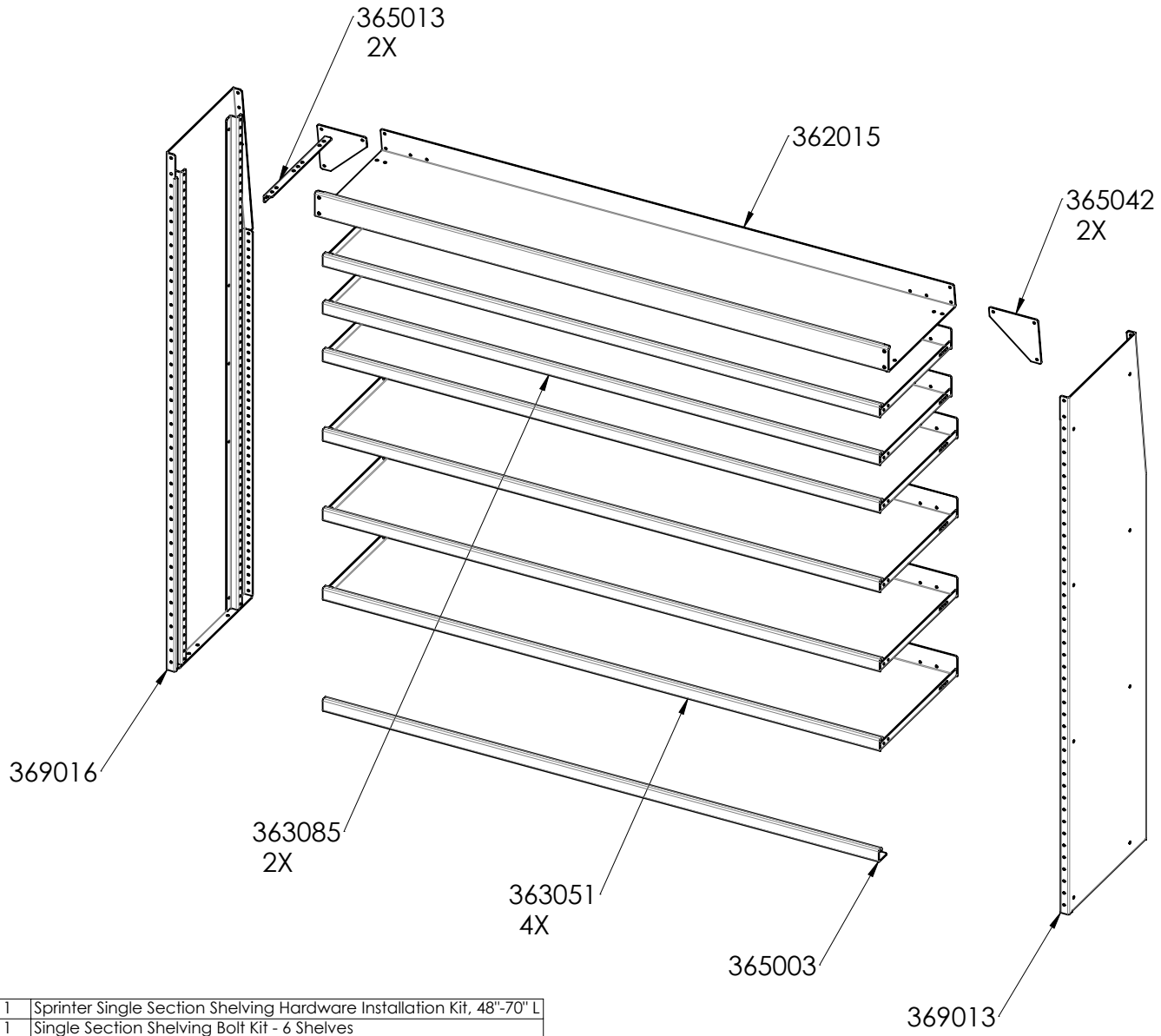

#	PART NO.	QTY.	DESCRIPTION
10	649017	1	Sprinter Single Section Shelving Hardware Installation Kit, 48"-70" L
9	649002	1	Single Section Shelving Bolt Kit - 6 Shelves
8	365013	2	L-Bracket 18" Shelving
7	365042	2	Shelving Cross Angle Support - 6"
6	365003	1	Bottom Lip 68"
5	362015	1	Tapered Top Tray Std. 3" Lip 18"d - 70"L
4	363085	2	Shelf - Bin Style - 16.5" x 68"
3	363051	4	Shelf - Bin Style - 18" x 68"
2	369013	1	Tapered End Panel 18" x 65" - Std Tray RH Asm.
1	369016	1	Tapered End Panel 18" x 65" - Std Tray LH Asm.

Description: Sprinter Std. Shelving Unit - 18" x 65" x 70" - Std. Style 6 Shelves

Rev.: --
Weight: 141.27 Lbs.
Material: Alum.
Item No.: 360131

7541 Chapman Ave Unit B
Garden Grove, Ca 92841

PROPRIETARY AND CONFIDENTIAL
THE INFORMATION CONTAINED IN THIS DRAWING IS THE SOLE PROPERTY OF J&M TRUCK BODIES. ANY REPRODUCTION IN PART OR AS A WHOLE WITHOUT THE WRITTEN PERMISSION OF J&M TRUCK BODIES IS PROHIBITED.

SIZE: A
Date: 9/15/2017
Drawn By: J. Chauvin
SCALE: 1:18

5 4 3 2 1