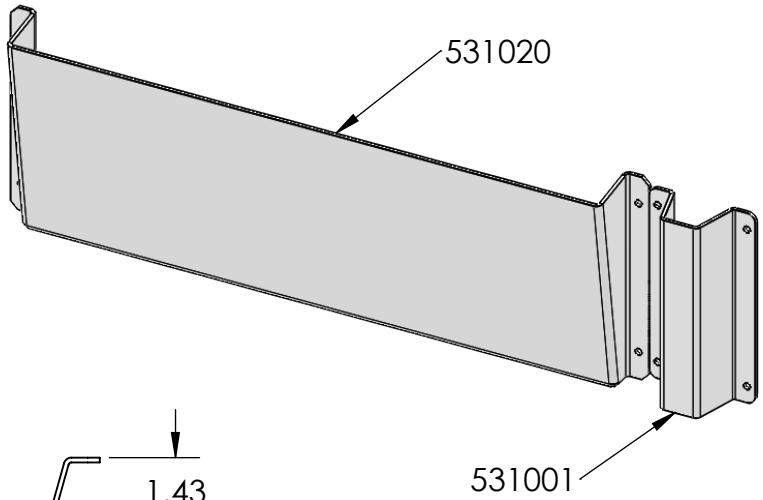

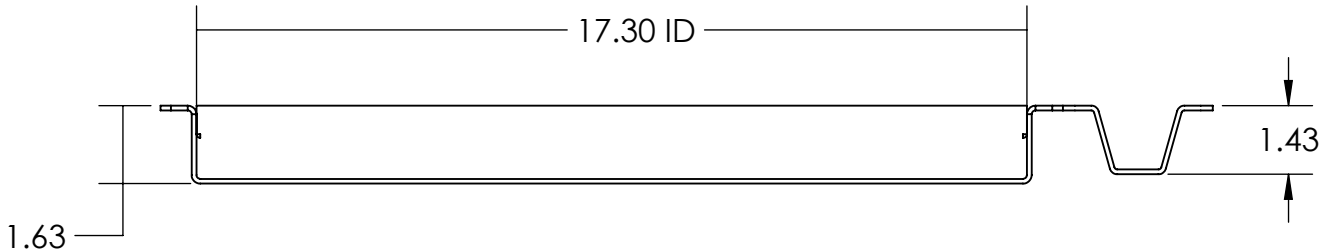

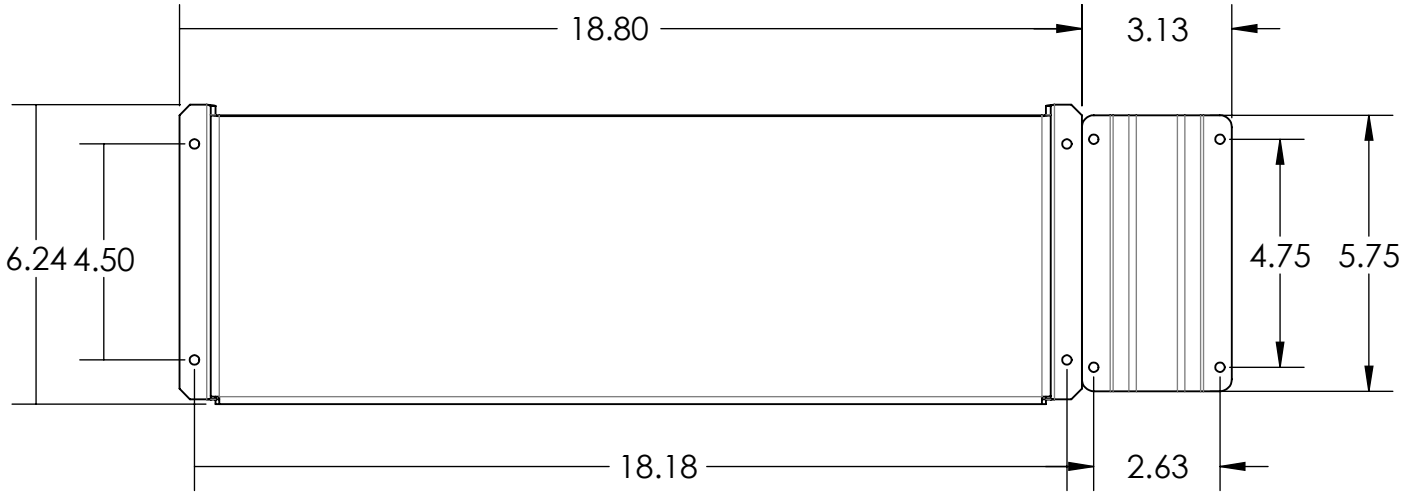

#	PART NO.	QTY.	DESCRIPTION
4	642026	8	#10-24 Nyloc Flange Nut - Zinc
3	642030	8	#10-24 x 1/2" Pan Head Machine Screw - Zinc
2	531001	1	Small Wrench Holder - w/Holes
1	531020	1	Large Dust Pan Holder - Mount

Rev.: --
Weight: 1.60 Lbs.

7541 Chapman Ave Unit B
Garden Grove, Ca 92841

Description: Large Dust Pan/and Dust Broom Holder
Material:
Item No.: 530012

PROPRIETARY AND CONFIDENTIAL
THE INFORMATION CONTAINED IN THIS DRAWING IS THE SOLE PROPERTY OF J&M TRUCK BODIES. ANY REPRODUCTION IN PART OR AS A WHOLE WITHOUT THE WRITTEN PERMISSION OF J&M TRUCK BODIES IS PROHIBITED.

SIZE: A
Date: 1/17/2018
Drawn By: M. Cecil
SCALE: 1:3

5 4 3 2 1