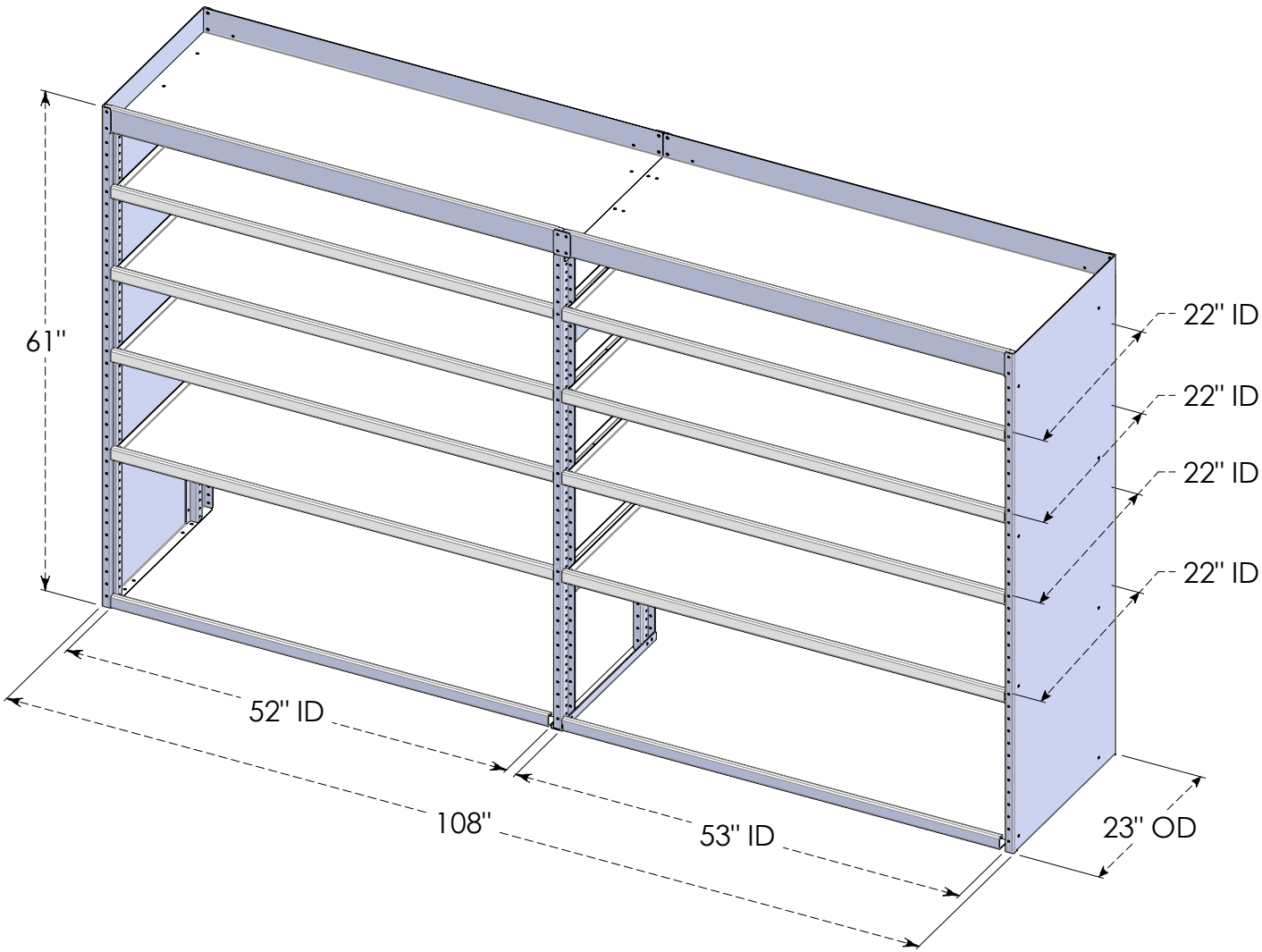

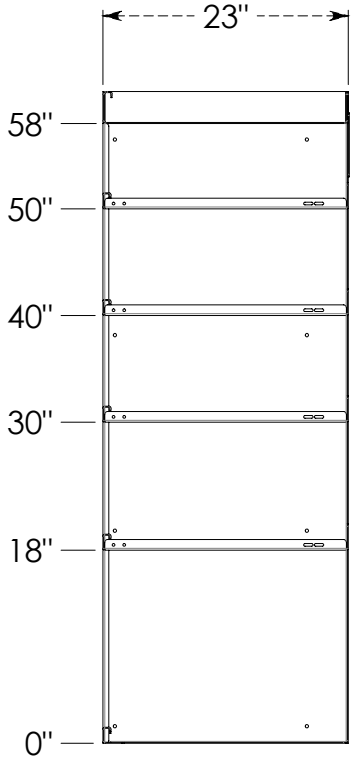

- Shelf heights are adjustable every 1"
- Bin Shelves have 1.5" Front Lip
- Top Tray has 3.0" Front Lip (Fixed)

Description	Cube Std. Shelving Unit - 23" x 61" x 108" - Std. Style 4 Shelves		
Rev. --	Weight 199.46 Lbs.	Material .100 5052 Smooth Alum.	Item No. 360073
7541 Chapman Ave Unit B Garden Grove, Ca 92841		PROPRIETARY AND CONFIDENTIAL	SIZE A
		Date 10/17/2017	
		Drawn By. J. Chauvin	
		SCALE: 1:18	

THE INFORMATION CONTAINED IN THIS DRAWING IS THE SOLE PROPERTY OF J&M TRUCK BODIES. ANY REPRODUCTION IN PART OR AS A WHOLE WITHOUT THE WRITTEN PERMISSION OF J&M TRUCK BODIES IS PROHIBITED.

5 4 3 2 1