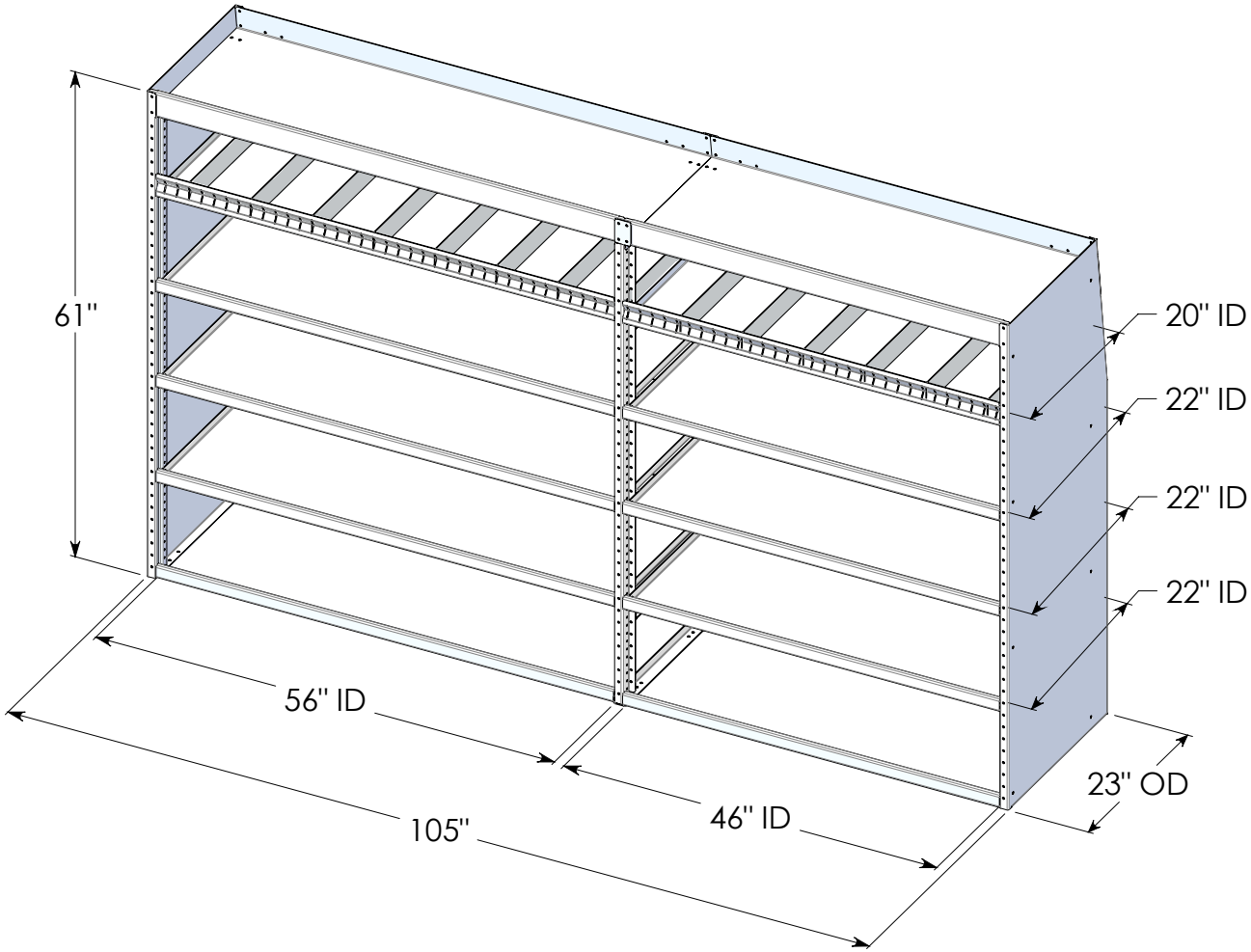

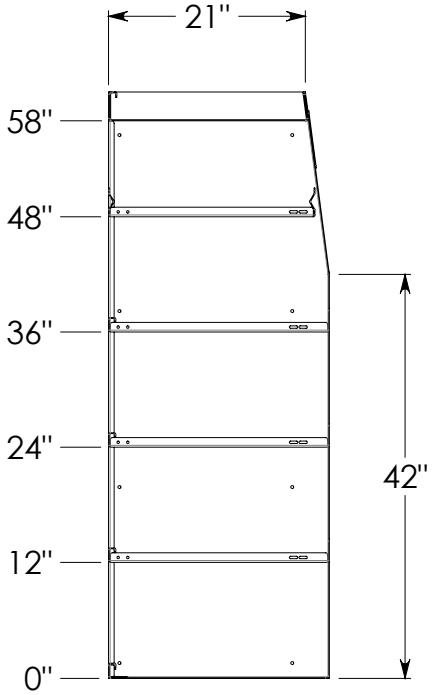

- Shelf heights are adjustable every 1"
- Bin Shelves have 1.5" Front Lip
- Slotted Shelves have 3" Front Lip
- Top Tray has 3.0" Front Lip (Fixed)

Rev.	Weight	Description	14+ Ford Transit Mid-Roof Van Std. Shelving Unit - 23" x 61" x 105" - Std. Style 4 Shelves
--	200.22 Lbs.	Material	Material <not specified>
		Item No.	360259
		SIZE	A
		Date	12/22/2017
		Drawn By.	J. Chauvin
		SCALE: 1:20	

7541 Chapman Ave Unit B
Garden Grove, Ca 92841

PROPRIETARY AND CONFIDENTIAL
THE INFORMATION CONTAINED IN THIS DRAWING IS THE SOLE PROPERTY OF J&M TRUCK BODIES. ANY REPRODUCTION IN PART OR AS A WHOLE WITHOUT THE WRITTEN PERMISSION OF J&M TRUCK BODIES IS PROHIBITED.

5 4 3 2 1