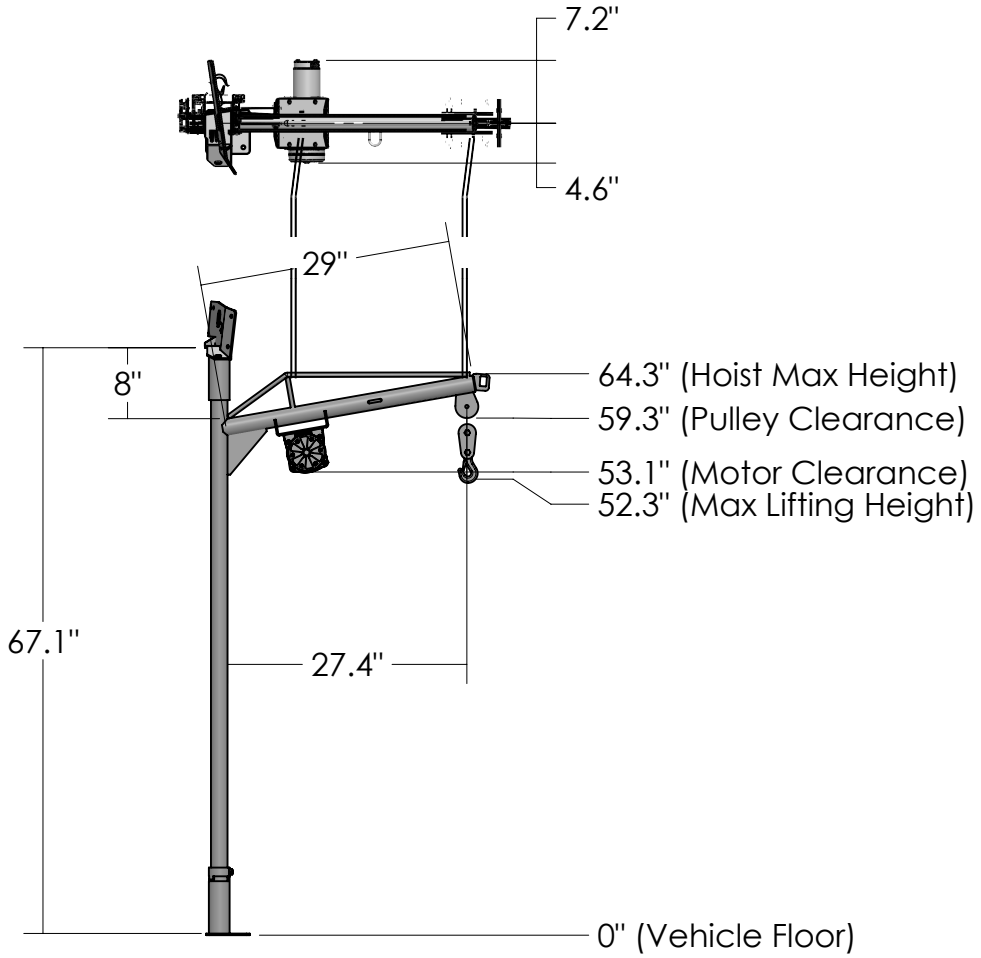

Notes:
*500Lbs. Lifting Capacity
*Powdercoated Black

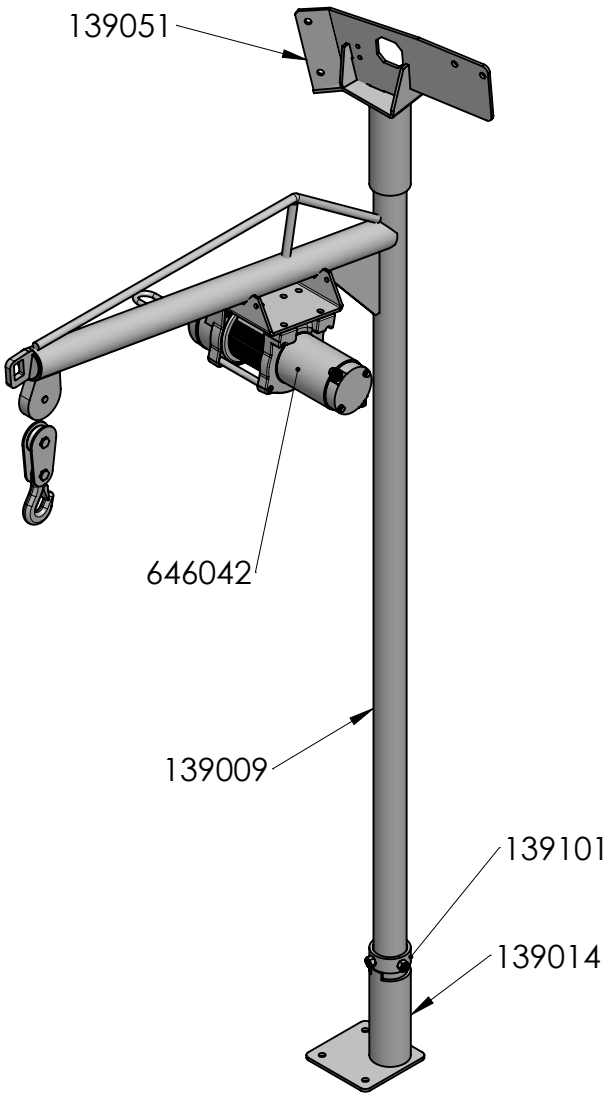

#	PART NO.	QTY.	DESCRIPTION
16	642174	5	5/16-18 x 1" Grade 8 Hex Bolt - Yellow-Chromate
15	642152	5	5/16 SAE Flat washer - Zinc
14	642151	3	5/16 Lock washer - Zinc
13	642156	2	5/16-18 Nyloc Flange Nut - Zinc
12	642392	3	5/16-18 Gold Zinc NutSert PreBulb (Rivet Nuts)
11	642203	3	5/16 x 1-1/2" - Flanged Hex Head Sheet Metal Screw
10	647070	3	White Nylon Spacer, 3/4"OD, 3/8"ID x 3/4" Long
9	640026	1	J&M Rivnut Tool (For 5/16-18 Bolt)
8	649155	1	Hoist Electrical Hardware Kit - Side Door (not shown)
7	646042	1	Winch Motor - Steel Line 12v With Handheld Remote
6	646001	1	Winch Pully Block - Attached to Cable on Motor
5	131045	1	Pulley w/ Axle and Cotter Pin
4	139101	1	Pivot Tube Stop Asm
3	139014	1	Lower Mount Asm. - Corner Base Plate
2	139051	1	Upper Mount Asm. - 14+ Ford Transit - MR/HR Side Door B-Pillar
1	139009	1	Boom Asm. - 10° x 28.75" Jib x 66"L Extended Boom

Description: 14+ Ford Transit Van - 12V Electric Hoist Kit - Side Door B-Pillar Mount MR/HR

Rev.: --
Weight: 51.02 Lbs.
Material: Mild Steel (Black)
Item No.: 130045

7541 Chapman Ave Unit B
Garden Grove, Ca 92841

PROPRIETARY AND CONFIDENTIAL
THE INFORMATION CONTAINED IN THIS DRAWING IS THE SOLE PROPERTY OF J&M TRUCK BODIES. ANY REPRODUCTION IN PART OR AS A WHOLE WITHOUT THE WRITTEN PERMISSION OF J&M TRUCK BODIES IS PROHIBITED.

SIZE: A
Date: 8/14/2026
Drawn By: S.Gutierrez
SCALE: 1:18

5 4 3 2 1

Cut Boom As Shown

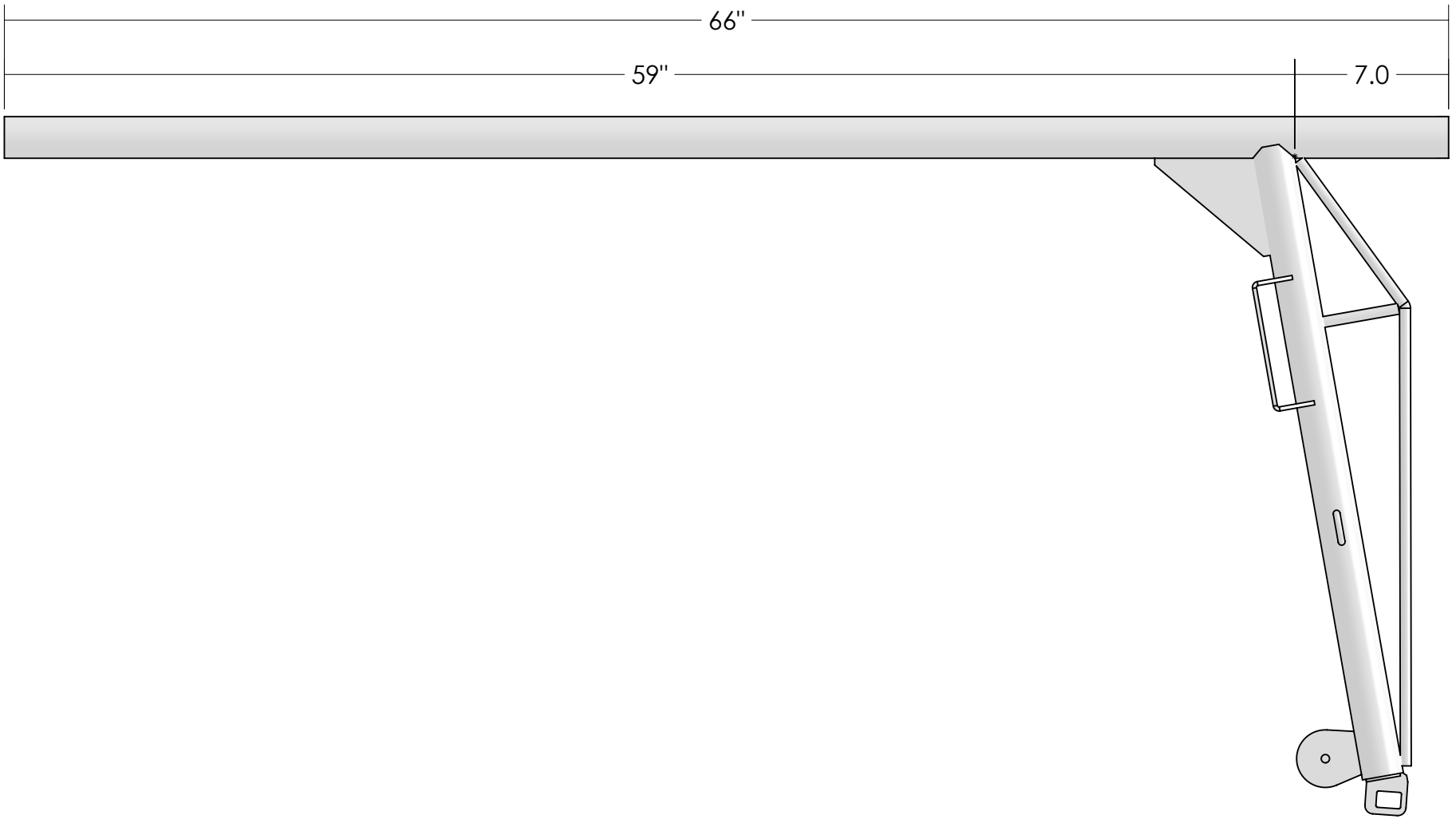

Description	Boom Asm. - 10° x 28.75" Jib x 66"L Extended Boom		
Rev. --	Weight Lbs.	Material Mild Steel (Black)	Item No. 130045
7541 Chapman Ave Unit B Garden Grove, Ca 92841		PROPRIETARY AND CONFIDENTIAL THE INFORMATION CONTAINED IN THIS DRAWING IS THE SOLE PROPERTY OF J&M TRUCK BODIES. ANY REPRODUCTION IN PART OR AS A WHOLE WITHOUT THE WRITTEN PERMISSION OF J&M TRUCK BODIES IS PROHIBITED.	SIZE A / Date 8/14/2026 / Drawn By. / SCALE: 1:7

5 4 3 2 1